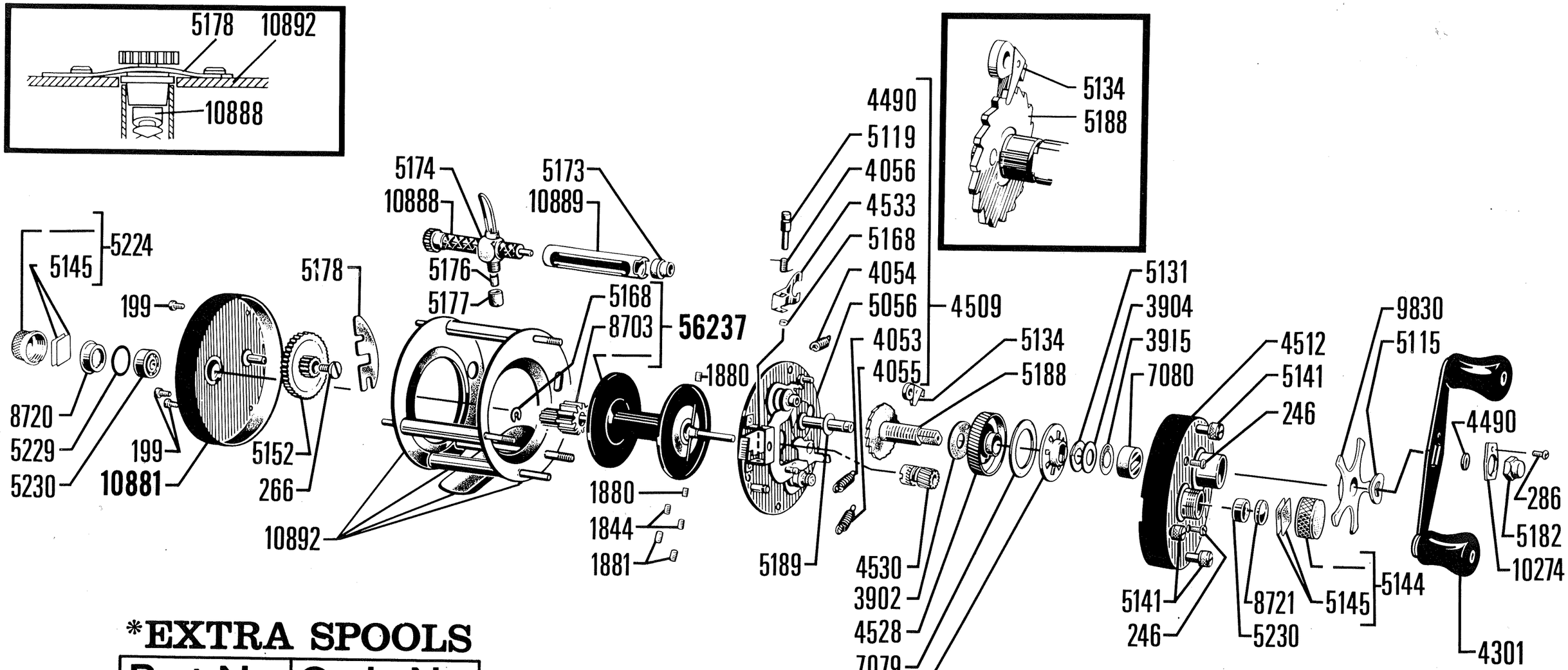

*EXTRA SPOOLS

Part No.	Code No.
10893	56237

4500 C

76 12 00